F.A.T.

How to build a fake Google street view car. Read more at fffff.at/google-street-view-car

Fake Google Steet View by F.A.T. 2010

Original Google Steet View car Germany

Materials:

(x1) PVC tubing 11 cm diam. - 140 cm (main pole)
(x2) wooden boards 100 x 16 x 2,5 cm (base)
(x1) wooden board 130 x 30 x 2,5 cm (base)
(x2) wooden poles 3 cm diam. - 130 cm (diagonals)
(x2) wooden poles 2 cm diam. - 100 cm (lower diagonals)
(x2) wooden board 55 x 55 x 1 cm (octagon)
(x2) wooden board 40 x 30 x 1 cm (center box)
(x2) wooden board 40 x 23 x 1 cm (center box)
(x2) wooden board 28 x 230 x 1 cm (center box)
(x6) big sheets of 2mm card board(x16) L-brackets
(x1) container craft glue 18 cm
(x1) hot glue gun
(x1) roll of double-sided tape
(x1) 50 meter roll of white duct tape
(x1) can of black paint
(x1) paint brush
(x3) black spraypaint
(x2) white spraypaint
(x1) big sheet of black reflective vinyl
(x10) M8 x 50 bolts
(x10) M8 nuts
(x50) selection of wood screws
(8 m) steel cable
(x8) cable crimps
(x4) cable tensioners
(x8) eye hooks
(x2) Google street view signs
(x1) roof rack
.....

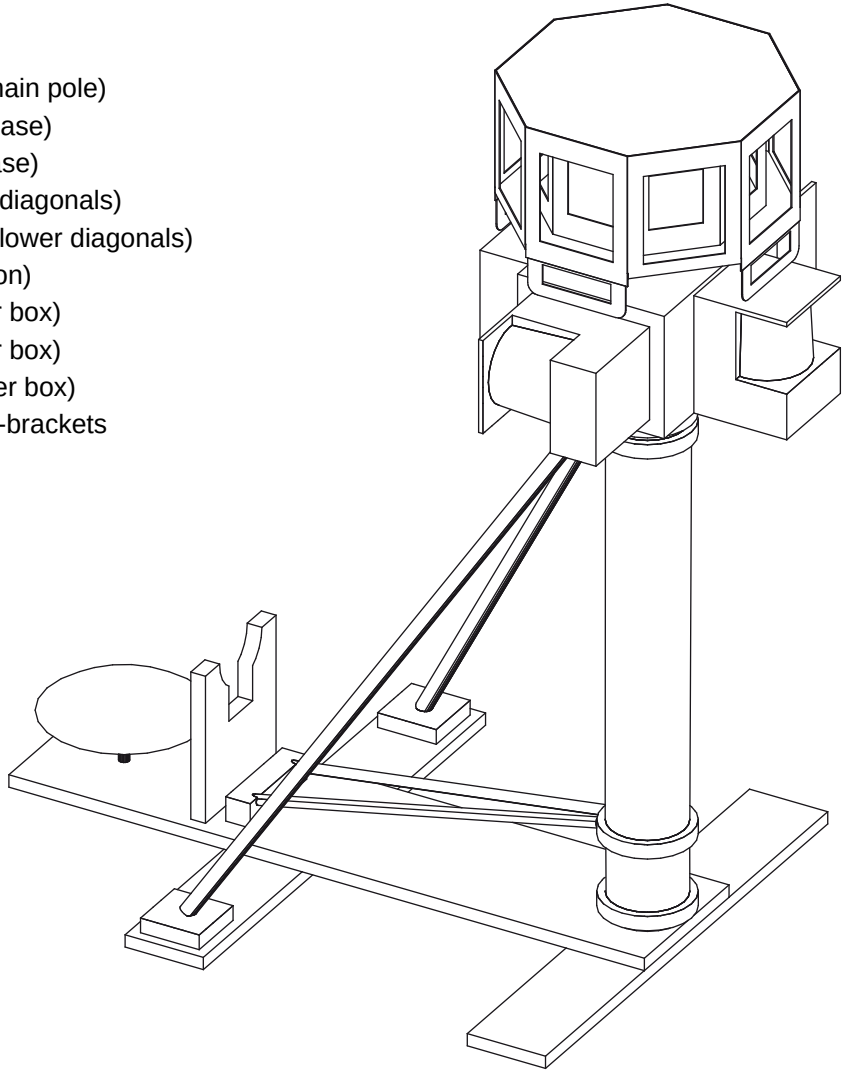

F.A.T.

How to build a fake Google street view car. Read more at fffff.at/google-street-view-car

Basic Structure
Top view

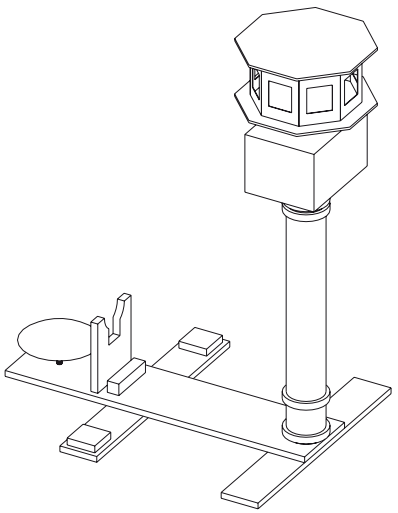

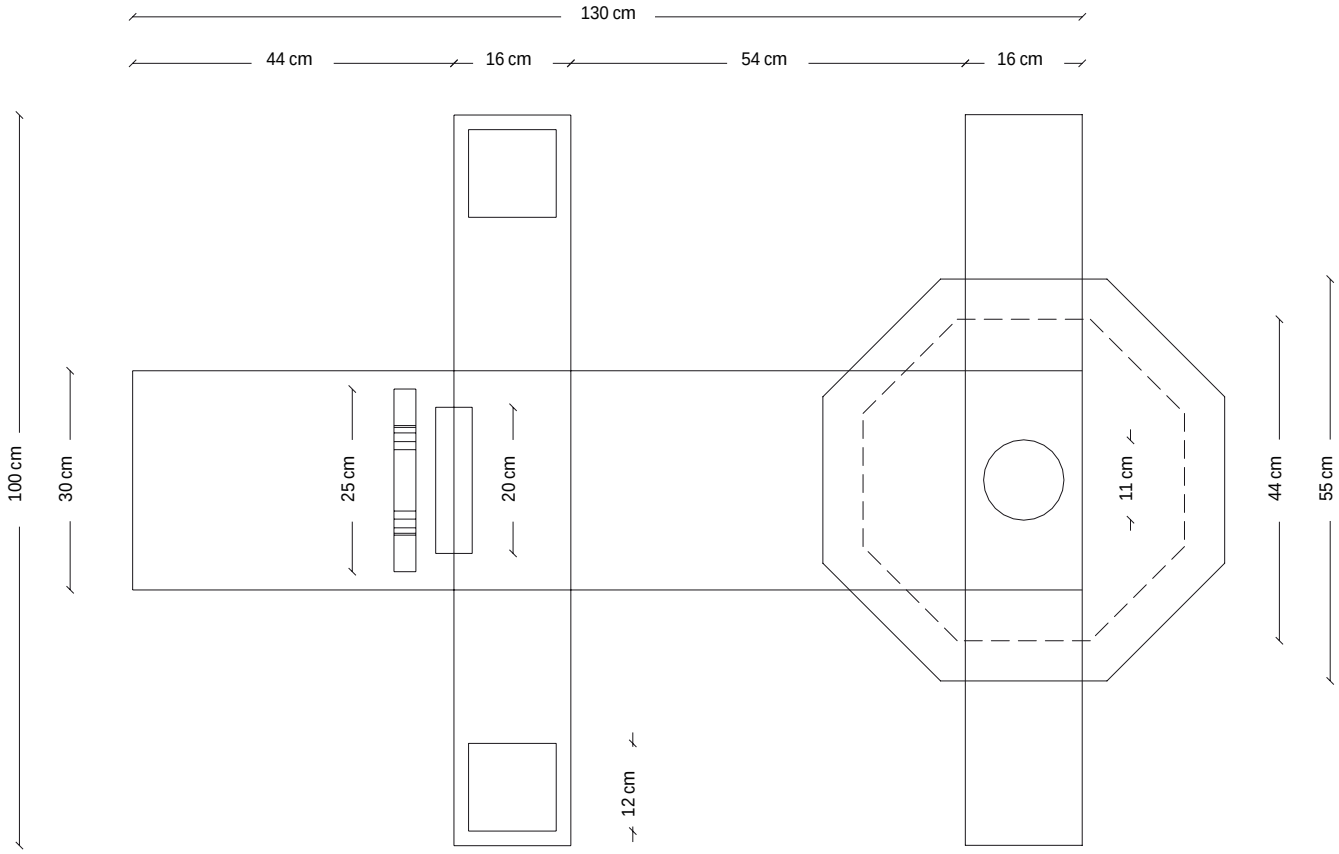

F.A.T.

How to build a fake Google street view car. Read more at fffff.at/google-street-view-car

Basic Structure
Side view

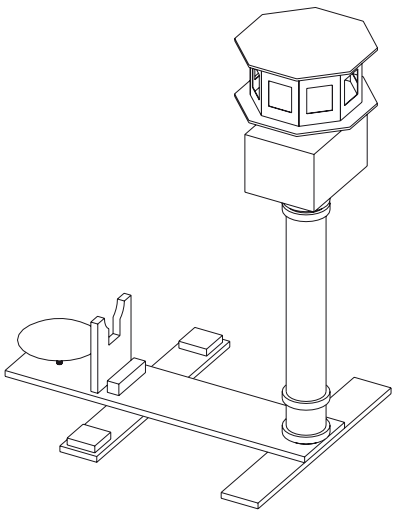

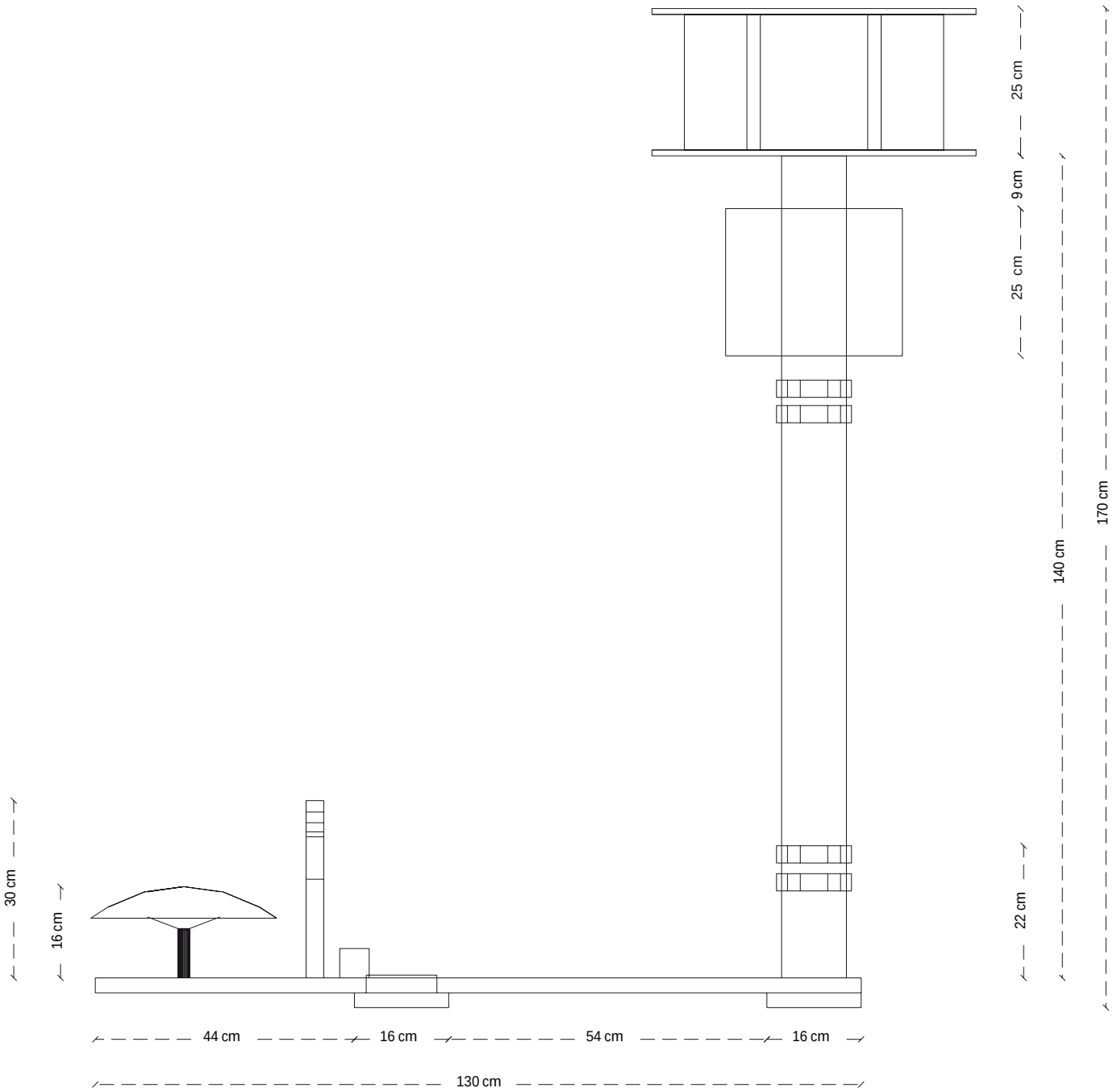

F.A.T.

How to build a fake Google street view car. Read more at fffff.at/google-street-view-car

Octogon

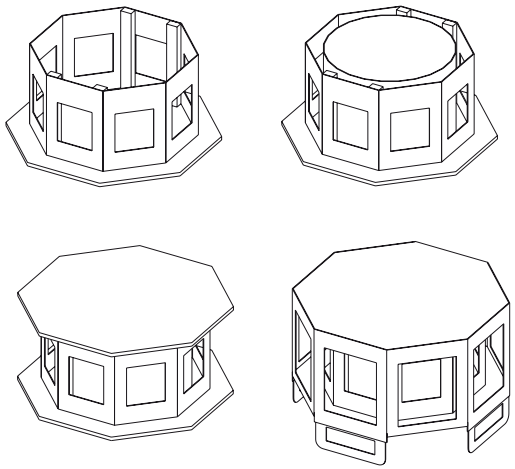

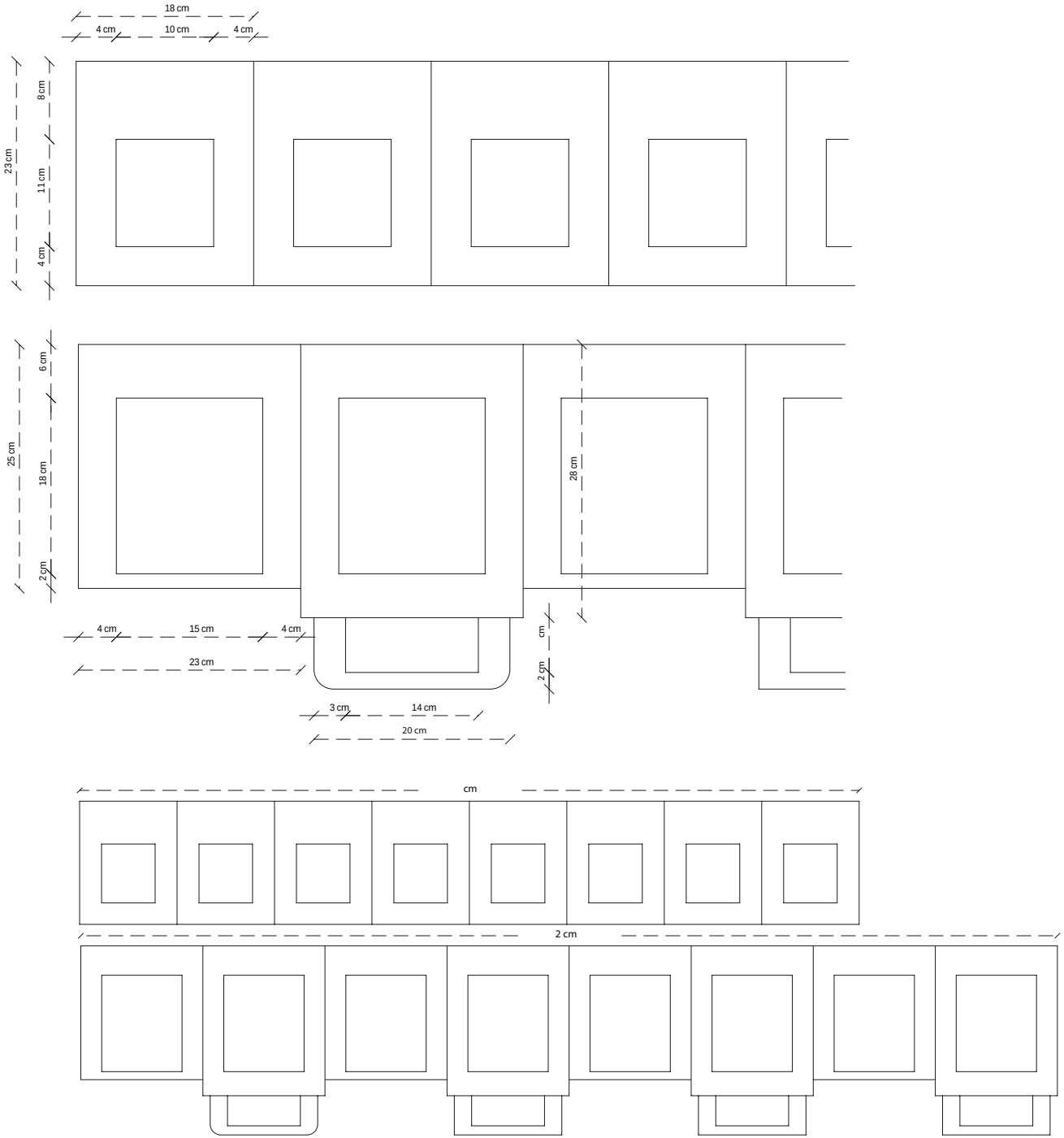

F.A.T.

How to build a fake Google street view car. Read more at fffff.at/google-street-view-car
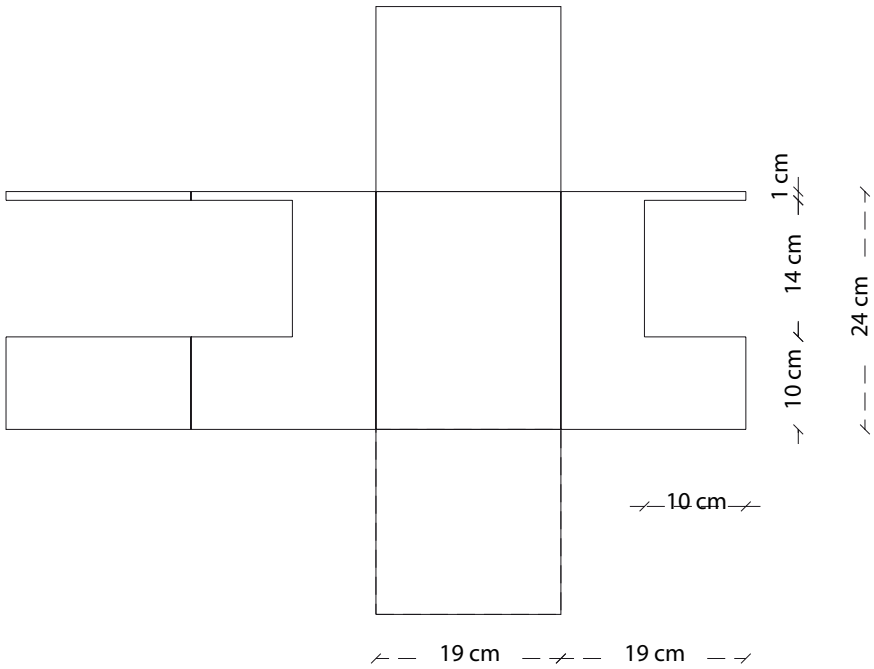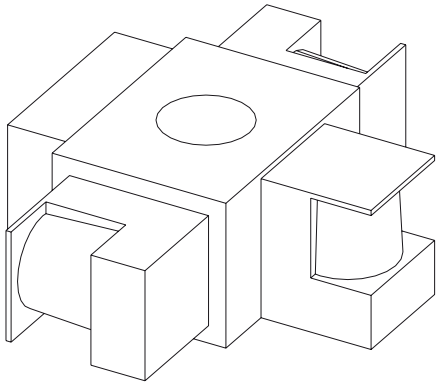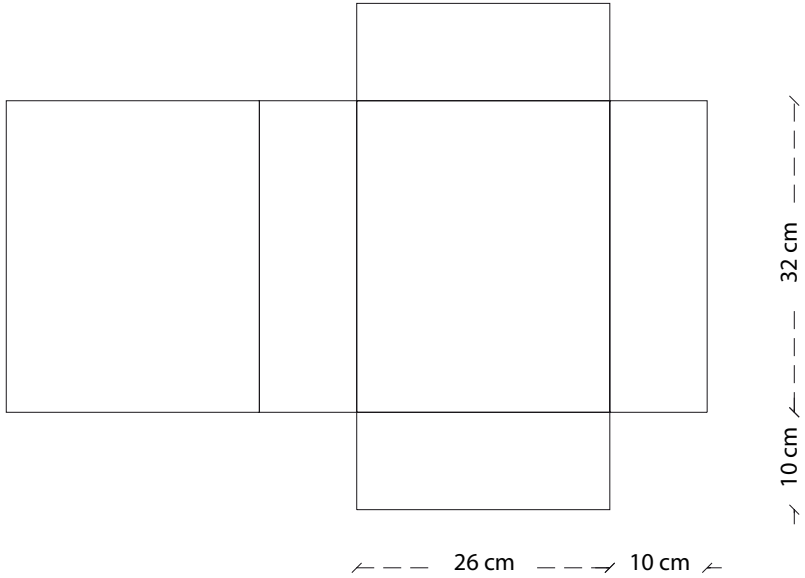
Laser scanners & controlunit